EMPAQUETADURA MULTI "V"

GAXETA DE CHEVRON "V" / MULTI "V" SEAL

ESPAÑOL

Particularmente aptas para severas condiciones de trabajo. Son empaquetaduras de gran resistencia mecánica empleadas en circuitos hidráulicos de movimientos rectilíneos alternados, son anticorrosivas y de bajo coeficiente de fricción. Generalmente se emplean juegos compuestos por tres anillos en "V" (intermedios), un adaptador hembra (base) y un adaptador macho (tapa). Soportan temperaturas de hasta 130°C y son particularmente resistentes al desgarre y a la deformación permanente, soportando presiones de 50 a 600 kg/cm^2.

PORTUGUES

Particularmente aptas para severas condições de trabalho. São gaxetas de grande resistência mecânica usadas em sistemas hidráulicos de movimentos retilíneos alternados. São anti-corrosivas e de baixo coeficiente de fricção. Geralmente são usados jogos compostos por três anéis em "V" (intermediários), um adaptador fêmea (base) e um adaptador macho (tampa). Suportam temperaturas de até 130°C e são particularmente resistentes a fissuras e deformações permanentes, suportando pressões de 50 a 600 kg/cm^2.

ENGLISH

Particularly able for severe working conditions. They are seals with great mechanicals resistance, used in hydraulic circuits of alternated rectilinear movements. They are non corrosive and have low friction coefficient. Generally, they are used in sets made of three "V" rings (intermediates), one female (bottom) and one male (top). They support working temperatures up to 130°C and they are resisting to rendness and permanent deformation. They resist working pressures from 50 to 600 kg/cm^2.

Tabla de Alojamientos y Tolerancias

Tabela de Alojamentos e Tolerâncias / Tolerances and Grooves Chart

Ø D Nominal	**D**	**d**	**D***	**d***	**E** **Alojamiento** Alojamento Groove	**F** **Tolerancia máx.** Tolerância máx. Greatest Tolerance	**P** **Diámetro del Pistón** Diâmetro do Pistõe Greatest Tolerance
0 + 100	± 0,03		Diámetro del Vástago *Diâmetro do haste* *Rod Diameter* Diámetro del Cilindro *Diâmetro do Cilindro* *Cylinder Diameter*		H - 5%	d* máx. + 1,0	D* mín. -0,3
101 + 250	± 0,04						
250 + 500	± 0,06						

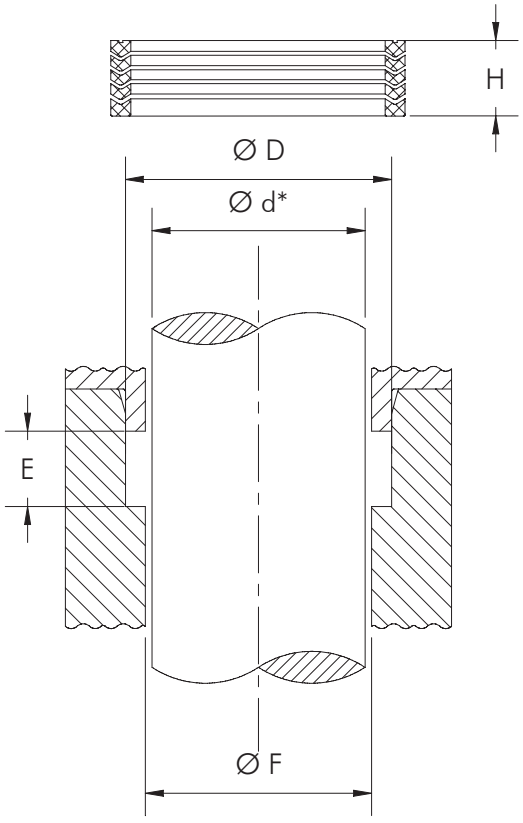

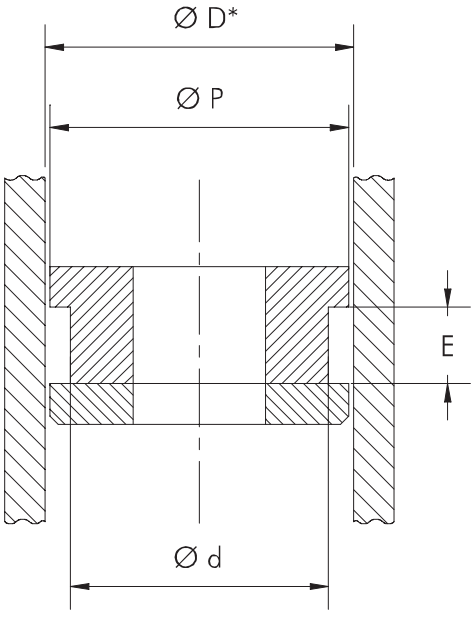

Ø d mm	Ø D mm	Ø d mm	Ø D mm	Ø d mm	Ø D mm	Ø d mm	Ø D mm	Ø d mm	Ø D mm
5,0	19,0	28,6	50,8	45,0	72,0	75,5	104,5	111,0	142,0
6,3	15,8	29,0	39,5	45,1	56,4	76,0	96,0	114,0	136,0
9,0	20,0	30,0	42,0	47,8	58,0	76,0	107,6	114,5	139,0
11,0	24,0	30,0	45,0	48,0	60,0	76,5	114,6	115,0	135,0
11,0	25,0	30,0	45,9	48,0	63,0	78,0	100,0	115,0	140,0
11,8	24,7	30,0	50,0	48,4	57,1	80,0	95,0	118,0	150,0
12,0	21,0	30,0	60,0	48,4	58,6	80,0	95,5	119,5	146,5
12,0	22,0	30,1	50,8	50,0	60,0	80,0	100,0	120,0	140,0
12,7	22,2	31,7	57,1	50,0	65,0	80,0	114,6	120,0	150,0
14,0	27,0	31,7	60,3	50,0	66,0	82,0	100,0	120,0	159,0
14,1	28,5	31,7	66,6	50,0	70,0	82,0	107,5	125,0	140,0
14,3	31,8	31,8	53,9	50,0	72,0	85,0	100,0	125,0	145,0
14,9	26,5	32,0	42,0	50,0	80,0	85,0	105,0	125,0	150,0
15,0	25,0	32,2	41,0	52,0	72,0	85,0	115,0	127,0	147,0
15,8	32,0	33,5	55,0	52,0	80,0	87,0	117,0	127,0	158,6
15,8	34,9	35,0	45,0	55,0	67,0	88,0	120 0	129,0	157,6
16,0	29,0	35,0	50,0	55,0	70,0	88,9	120,6	130,0	150,0
17,0	28,0	35,0	51,0	55,0	75,0	90,0	105,0	130,0	154,4
18,0	38,0	35,0	60,0	55,0	80,0	90,0	110,0	130,0	160,0
18,5	26,0	36,0	48,0	55,0	82,5	90,0	115,0	131,0	153,0
18,5	37,5	36,0	52,0	56,0	71,0	90,0	121,5	133,3	158,7
19,0	34,0	36,5	51,0	57,1	95,2	90,5	114,3	133,3	165,1
19 0	41 2	38,0	55,0	58,0	75,0	95,0	111,6	135,0	160,0
19,5	30,5	38,0	58,0	60,0	69,4	95,0	115,0	139,7	161,9
19,6	27,8	38,0	60,0	60,0	75,0	95,0	127,5	139,7	177,8
20,0	28,0	38,0	65,0	60,0	80,0	95,5	110,5	140,0	160,0
20,0	30,0	38,1	46,7	60,0	83,0	97,1	120,0	144,4	177,7
20,0	35,0	38,1	66,0	60,2	69,8	98,0	123,0	145,0	157,0
22,0	31,0	39,0	67,0	60,2	71,3	100,0	115,0	145,0	165,1
22,0	32,0	40,0	50,0	60,3	82,5	100,0	120,0	145,0	170,0
22,0	35,0	40,0	52,0	62,0	82,0	100,0	125,0	145,0	175,0
22,2	44,4	40,0	53,0	63,0	83,0	102,0	120,0	146,0	177,8
24,0	35,0	40,0	55,0	63,5	101,6	103,1	122,3	149,5	174,5
25,0	37,0	40,0	56,0	65,0	80,0	104,0	120,0	150,0	174,5
25,0	40,0	40,0	60,0	65,0	85,0	105,0	125,0	150,0	180,0
25 0	60 0	40,0	65,0	67,5	78,5	105,0	130,0	151,5	181,6
25,4	35,0	40,0	68,0	70,0	85,0	106,0	134,5	155,0	175,0
27,0	35,0	41,8	54,0	70,0	90,0	107,9	139,7	158,7	190,5
28,0	38,0	42,0	50,0	72,0	94,0	108,0	130,0	160,0	180,0
28,0	39,8	44,4	70,5	72,0	101,6	110,0	122,0	160,0	183,0
28,0	40,0	44,5	70,0	75,0	90,0	110,0	125,0	164,6	198,0
28,0	43,0	45,0	55,0	75,0	95,0	110,0	126,0	169,0	201,0
28,0	46,0	45,0	60,0	75,0	100,0	110,0	130,0	169,9	208,0
28,0	59,0	45,0	65,0	75,0	115,0	110,0	135,0	171,5	186,5
28,6	45,7	45,0	70,0	75,5	99,5	111,0	139,0	173,0	186,8

Para medidas inexistentes contáctese con nosotros.
Para medidas inexistentes contate-nos. / For inexistent measures please contact us.

Ø d mm	Ø D mm	Ø d mm	Ø D mm	Ø d mm	Ø D mm	Ø d mm	Ø D mm	Ø d mm	Ø D mm
176,0	190,0	208,0	250,0	241,0	274,0	300,0	330,0	400,0	432,0
177,0	210,0	210,0	235,0	241,0	280,0	300,0	338,0	400,0	440,0
177,3	209,5	210,0	240,0	241,3	279,4	318,0	342,9	406,0	436,0
180,0	210,0	211,0	242,0	245,0	275,0	324,0	349,4	440,0	478,0
180,5	212,5	213,0	235,0	245,5	277,5	324,0	366,0	440,0	480,0
183,5	203,5	214,0	230,0	250,0	280,0	336,4	352,2	441,3	479,4
184,1	215,9	214,3	227,0	254,0	298,0	347,5	388,0	457,5	489,0
194,8	224,8	220,0	250,0	266,5	287,3	347,5	390,0	465,0	505,0
197,4	234,0	220,0	251,0	268,5	287,3	351,0	373,0	476,0	446,0
198,0	228,0	225,0	250,0	270,0	300,0	351,0	388,0	549,0	582,0
200,0	215,0	228,6	260,3	280,0	310,0	351,0	390,0	580,0	620,0
200,0	220,0	232,0	267,0	280,0	315,0	353,0	397,0	598,0	642,0
200,0	230,0	234,5	250,5	285,0	315,0	354,6	380,0	617,0	664,0
200,0	240,0	238,0	272,0	285,7	311,1	355,0	386,0	694,0	744,0
201,0	233,0	239,0	279,4	295,0	325,0	365,0	395,0	698,0	744,0
202,0	225,2	240,0	260,0	295,0	326,0	370,0	401,6	750,0	790,0
202,3	217,0	240,0	270,0						

Para medidas inexistentes contáctese con nosotros.
Para medidas inexistentes contate-nos. / For inexistent measures please contact us.